Acme Sanitary Ware Co. Ltd.
1/F, Acme Building, 22-28 Nanking Street, Kowloon, Hong Kong
Tel: 2388 7171 Fax: 2710 8012
Email: acme@acmesanitary.com.hk
Website: www.acmesanitary.com.hk
Since 1949

GROHE Pure Freude an Wasser

PROJECT		REF		REV	ITEM CODE	
LOCATION		DATE			PAGE	

SANITARY WARE SPECIFICATION SHEET

Item Descriptions	GROHE (Germany) "Grohtherm" Chrome plated thermostatic bath tub mixer for 2 outlets with integrated shut off/diverter valve
Dimensions	L158 x W43 x H158 mm
Model	24077000 (Thermostat bath tub mixer) 35600000 (Mounting box)
Finish	Chrome Plated
Country of origin	Germany
Manufacturer	GROHE Limited
Supplier	Acme Sanitary Ware Co. Ltd Mr. Eric Wong/ Mr. Wilson Hung
Contact Tel/Fax	(852) 2388-7171 / (852) 2710-8012
E-mail	acme@acmesanitary.com.hk
Website	www.acmesanitary.com.hk

"Grohtherm"
Thermostatic bath tub mixer for 2 outlets with integrated shut off/diverter valve

- set for final installation for
- GROHE Rapido SmartBox 35 600
- **GROHE TurboStat** compact cartridge with wax thermoelement
- **GROHE StarLight** chrome finish
- wall escutcheon with **GROHE FastFixation** (covered escutcheon- and shaft sealing, covered fixing)
- metal escutcheon, retroactively 6° adjustable
- printed hand shower and bath filler symbol
- **GROHE SafeStop** safety button at 38°C (calibration required)
- **GROHE SafeStop Plus** optional temperature limiter at 43°C or 46°C included
- GROHE AquaDimmer, integrated shut off/diverter valve
- flow performance:
  outlet B = 27 l/min
  outlet C = 30 l/min
- **without roughing-in-set**

GROHE Rapido SmartBox

- Universal rough-in box, 1/2"
- 3 outlets 1/2"
- 2 inlets below, 1/2"
- installation depth 75-105 mm
- connection unit in DR brass
- pre-mounted flushing plug
- stable build-in box and protective cover
- fixing options for solid walls and dry
- cladding
- gasket
- without set for final installation





Illustration/ Drawing





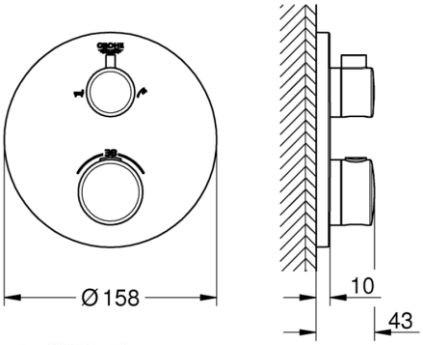

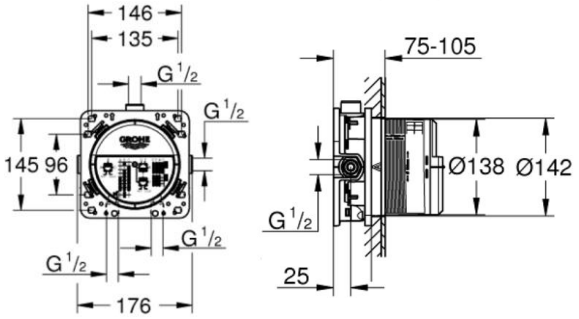

Colour options:

000 I StarLight Chrome	GL0 I Cool Sunrise
DC0 I SuperSteel	GN0 I Brushed Cool Sunrise
DA0 I Warm Sunset	DL0 I Brushed Warm Sunset
A00 I Hard Graphite	BE0 I Polished Nickel
AL0 I Brushed Hard Graphite	EN0 I Brushed Nickel

Note: YouTube (Grohtherm 2-Handle Thermostatic Trim) https://www.youtube.com/watch?v=z2rh8RdWTsw
YouTube (Rapido SmartBox | Installation Video) https://www.youtube.com/watch?v=KsWdVrq9fVI

** All information of the above is for the reference only. No prior notice is made if any changes.*

Acme Sanitary Ware Co. Ltd.
1/F, Acme Building, 22-28 Nanking Street, Kowloon, Hong Kong
Tel: 2388 7171 Fax: 2710 8012
Email: acme@acmesanitary.com.hk
Website: www.acmesanitary.com.hk
Since 1949

GROHE Pure Freude an Wasser

PROJECT		REF		REV	ITEM CODE	
LOCATION		DATE			PAGE	

SANITARY WARE SPECIFICATION SHEET



Easy to clean thanks to the GROHE StarLight chrome coating

Just wipe the tap down with a dry cloth – the ultra smooth surface finish is scratch resistant and ensures a lasting luminous sheen. You'll save plenty of time cleaning while your tap always looks shiny and new.



Constant water temperature thanks to reliable GROHE TurboStat technology

Our precise control technology ensures an instant water flow at the desired temperature and keeps it constant irrespective of any fluctuations in water pressure or supply.



GROHE SafeStop (Plus) – double scalding protection at 38°C and (optional) 43°C

Great for homes with children, this safety feature is set at 38°C, preventing you from turning up the water temperature too high. If desired, higher temperatures can be selected by pushing the button. Optional for extra safety: the easy-to-fit GROHE SafeStop Plus limiter ensures that the temperature does not exceed 43°C.









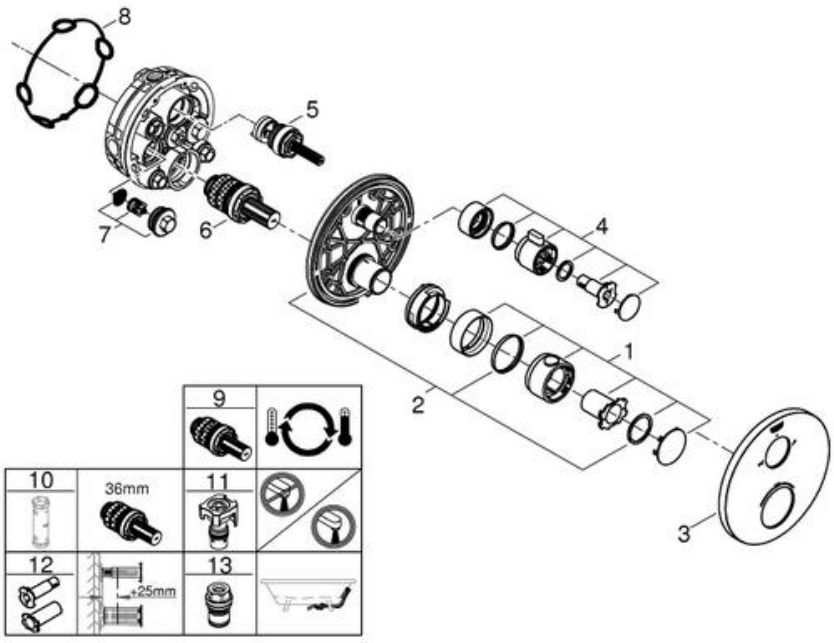

Pos.-nr.	Prod. description	Order-nr.
1	Temperature control handle	49082000
2	Mounting plate	49080000
3	Escutcheon	49075000
4	Handle for shut-off valve	49081000
5	Aquadimmer	49084000
6	Thermostatic compact cartridge 3/4"	49028000
7	Non-return valve	49085000
8	Seal	48360000
9	GROHE TurboStat cartridge 3/4"	49003000*
10	Socket spanner	49059000*
11	Service stops	1405300M*
12	Universal extension set 2-handle thermostats, 25 mm	14058000*
13	Backflow protection combination (EN1717)	14055000*

* Optional accessories

** All information of the above is for the reference only. No prior notice is made if any changes.*

水務署
Water Supplies Department

總部 Headquarters
香港灣仔告士打道七號入境事務大樓 48 樓
48/F, Immigration Tower, 7 Gloucester Road, Wan Chai, Hong Kong

本署檔號 Our ref. 2 ` D 2024 T/J(1020/2024)
來函檔號 Your ref.

電話 Tel. :
傳真 Fax. : 2824 0578

16 October 2024



Approval of "GROHE" Thermostatic Mixers
(General Acceptance No. C20240730)

Your E-Application [file-id: ETJ-GA-20240920-310] dated 23 September 2024 refers.

Having considered the test report ref. J29936 issued on 20 September 2024 by Nutek Systems (HK) Ltd., this Authority accepts that the fittings described below comply with, and their use when correctly installed does not contravene, the Waterworks Ordinance and Regulations.

Name of Manufacturer:	Grohe AG
Country of Origin:	Germany
Brand:	Grohe
Details of Fittings:	1/2" Wall mounted thermostatic mixer
Model:	35600000 + 24076XXX, 35600000 + 24077XXX, 35600000 + 24079XXX, 35600000 + 24080XXX, 35600000 + 24154XXX, 35600000 + 24155XXX (where "XXX" denotes the code of colour)
Body Markings:	GROHE

Expiry Date: 3 July 2029

This Authority hereby permits the use of the above fittings in fresh water plumbing systems subject to full adherence to Waterworks installation requirements. In particular, you are required to draw your customers' attention to the following requirement-

> "The cold water supply to the fittings shall be drawn from the same source that supplies the hot water apparatus so as to provide a balanced pressure and to obviate the risk of scalding in the event of a restriction or failure in the water supply." AND
>
> "The shower head or handspray should not be placed in submerged conditions and should be securely fixed to the original position after use."

A condition of this acceptance is that the fittings to be installed shall be replicas of the samples as certified by the testing agent mentioned above and without modifications. This acceptance may be withdrawn at any time if the standard of the fittings installed fails to meet that of the approved samples or if the fittings are found to be unsuitable for use in fresh water plumbing systems.

This acceptance is only applicable to the main body of the fittings, unless otherwise specified.

For the use of the fittings in any project, the General Acceptance Number of this letter must be quoted as a means of identification of acceptance of the fittings by this Authority.

Should you have any enquiries, please contact our Engineer Mr Albert CHOW at tel. no. 3583 4086.

Yours faithfully,

(Terry KUNG)
for Director of Water Supplies

Encl.

c.c. WSD 3321/1/82] - without catalogue
ME/MC] - with soft copy only